LIBERTY SERIES - LL10

Progressive Cavity Pump

Features

- Modular Design
- Maintenance Free
- Easy Assembly/Disassembly
- Simple Pin Joint Design
- Non-Pulsating Low Shear
- NPT Discharge Connection

Materials

Rotor: *Tool Steel & Stainless Steel, Chrome-Plated*

Stator: *Buna, Rubber, Viton™, EPDM*

Motor: *5, 7.5, 10, and 15 hp*

Inlet: *6"*

Outlet: *5"*

Bases: *Carbon and Stainless Steel*

Curves

Click Links Below

1-Stage	2-Stage	3-Stage
1LL10	**2LL10**	**3LL10**

Drawings

Click Links Below

1-Stage	2-Stage	3-Stage
1LL10	**2LL10**	**3LL10**

Pump Description

The Liberty LL10 Progressive Cavity Pump is an ideal unit for abrasive pumping applications like thick gypsum compounds and paper coatings. Flow rate (18.8 gallons/100 revolutions) 15 up to 140 GPM and represents one of our most popular heavy duty models of Progressive Cavity Pumps for Industry currently carried by Liberty Process. The LL10 Liberty pump unit is a low-cost, maintenance free, dependable drop-in replacement pump.

The Liberty LL10 Series PC Pump is a standard flanged pump design manufactured with high strength cast iron or 316 stainless steel pump casings and designed in 1, 2, and 3 stages for 75, 150 or 225 psi discharge pressures.

The pump unit is a modular design with simple hardened pinned joint drive assembly. The LL10 Rotors are typically hardened tool steel or 316 stainless steel with a hard chrome plating for long life in abrasive pumping applications.

All other wetted parts are either carbon steel or 316 stainless steel. Stators are available in many elastomer materials such as buna, natural rubber, epdm and viton. The standard seal design is a set of packing with a Lantern Ring and flush connectors. Mechanical seal options are readily available.

The Liberty LL10 Progressive Cavity Pump parts are direct aftermarket replacements that work with the Moyno™ L10 Series, Tarby™ TL10 Series and Continental™ CL10 Series.*

Contact a Liberty Process representative today for more information about the LL10 Series.

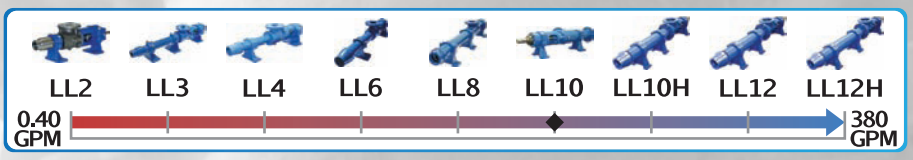

P: 847.640.7867 F: 847.640.7855
2525 Clearbrook Drive Arlington Heights, IL 60005

LIBERTY SERIES - ILL10

Progressive Cavity Pump

Performance Curves

RPM	100	200	300	400	500	600	700
NPSH REQ'D	.9	1.7	2.6	3.5	4.9	6.9	9.1
MIN. HP	1	1-1/2	2	3	5	5	5

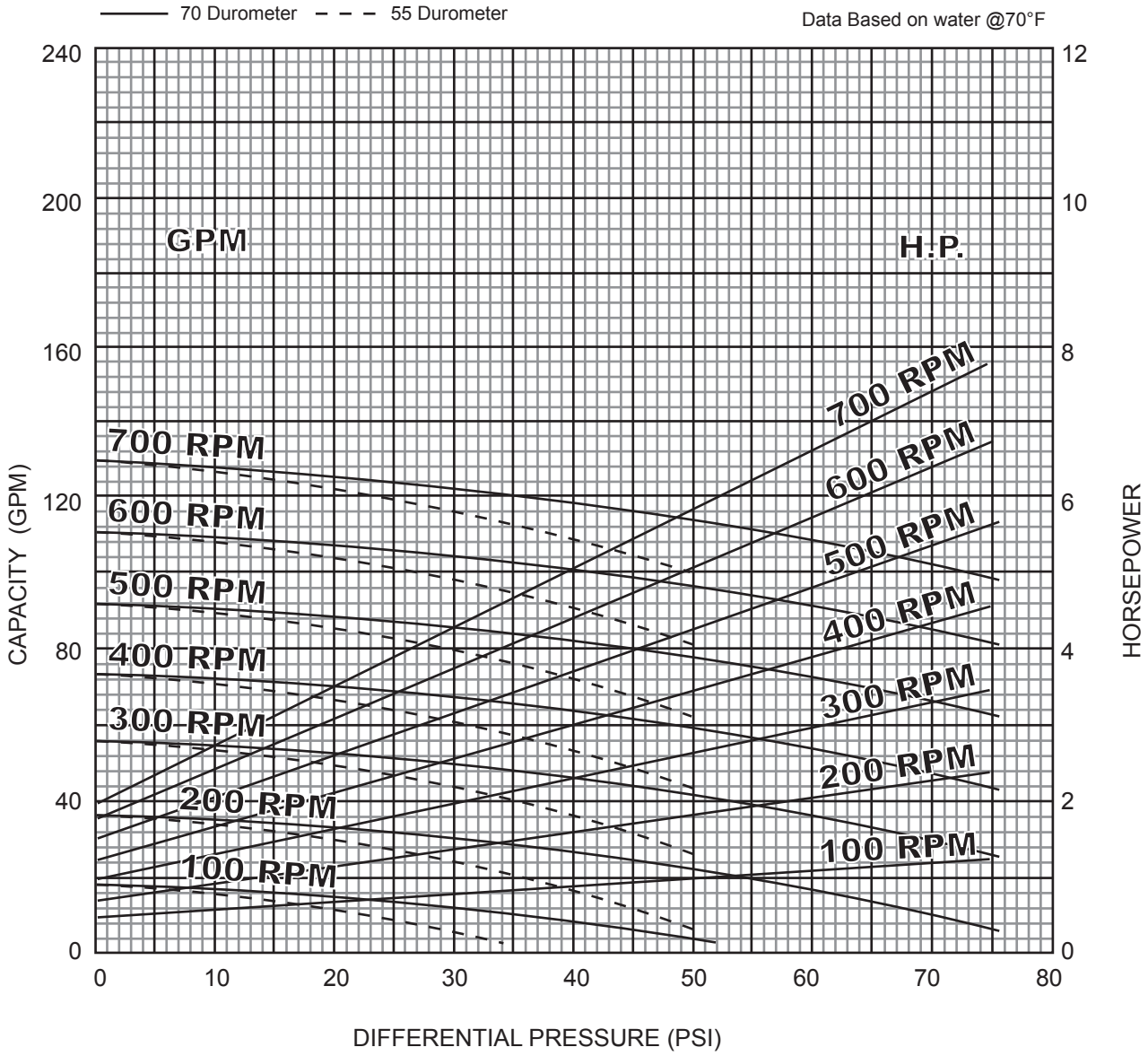

1 Stage Pump

BACK TO TOP

P: 847.640.7867 F: 847.640.7855

2525 Clearbrook Drive Arlington Heights, IL 60005

LIBERTY SERIES - 2LL10

Progressive Cavity Pump

Performance Curves

RPM	100	200	300	400	500	600	700
NPSH REQ'D	.9	1.7	2.6	3.5	4.9	6.9	9.1
MIN. HP	1-1/2	2	3	5	7-1/2	7-1/2	10

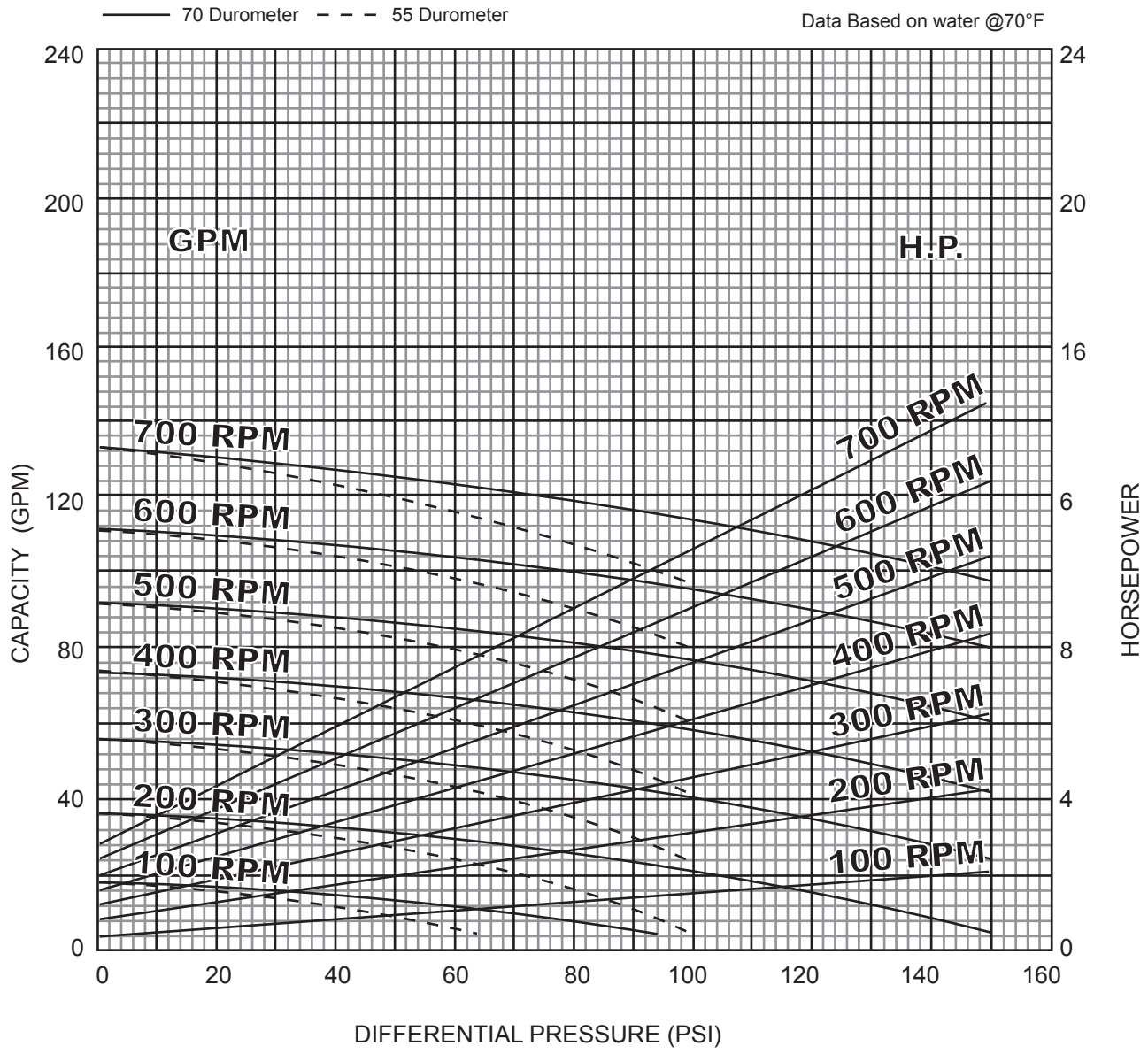

2 Stage Pump

BACK TO TOP

P: 847.640.7867 F: 847.640.7855

2525 Clearbrook Drive Arlington Heights, IL 60005

www.libertyprocess.com

LIBERTY SERIES - 3LL10

Progressive Cavity Pump

Performance Curves

RPM	100	200	300	400	500	600	700
NPSH REQ'D	.9	1.7	2.6	3.5	4.9	6.9	9.1
MIN. HP	2	3	5	7-1/2	10	10	15

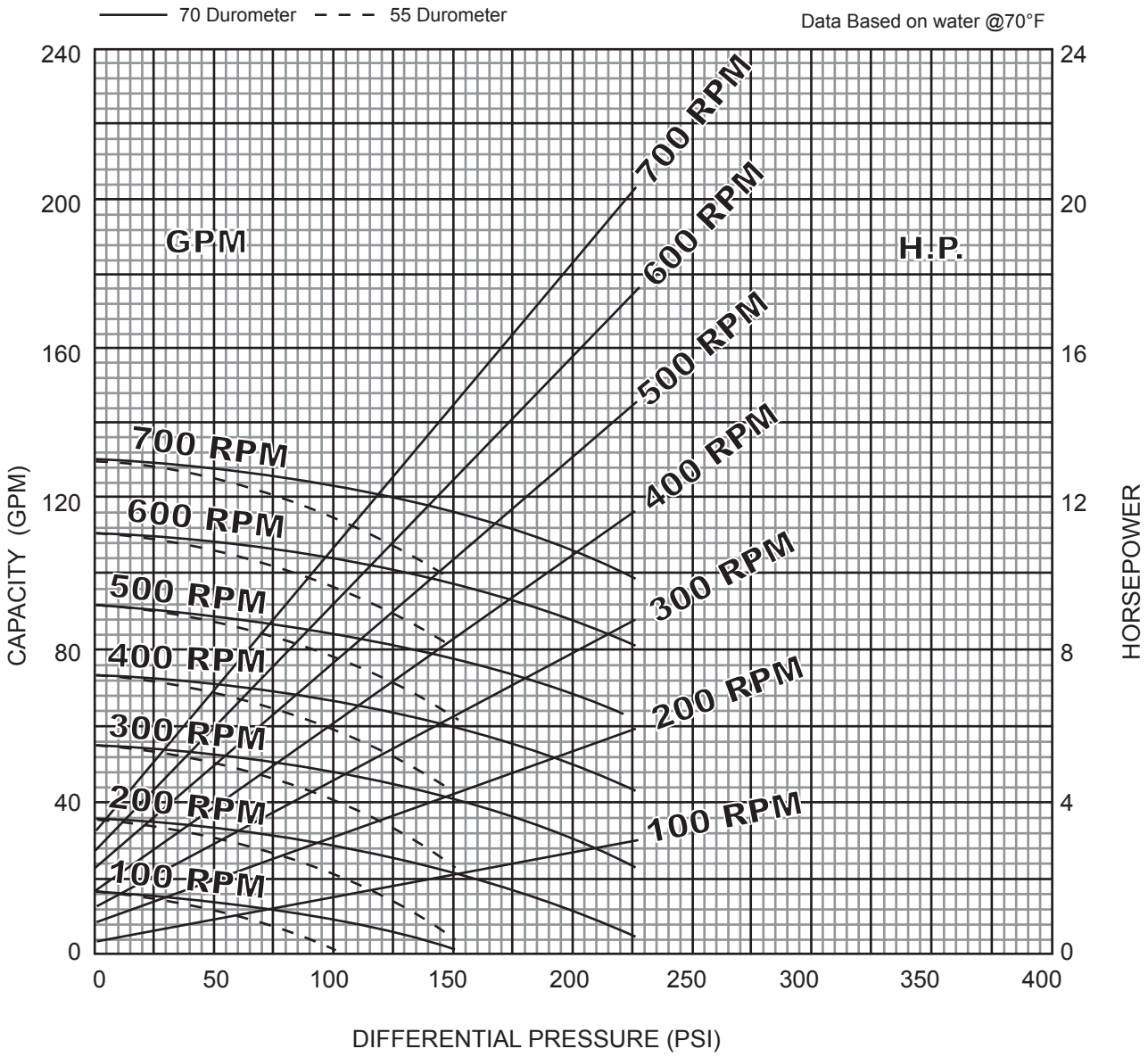

3 Stage Pump

BACK TO TOP

P: 847.640.7867 F: 847.640.7855

2525 Clearbrook Drive Arlington Heights, IL 60005

LIBERTY SERIES - ILL10

Progressive Cavity Pump

Dimensional Drawings

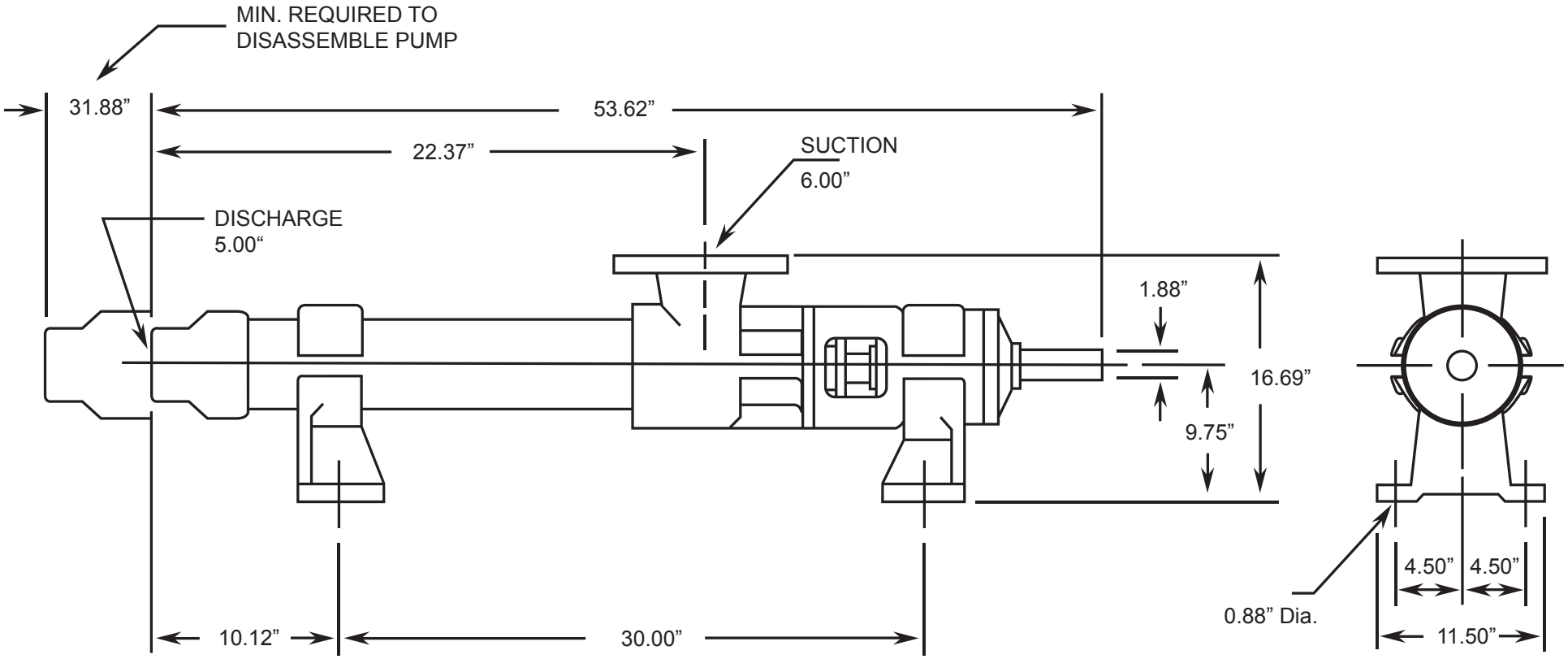

Net weight
≈ lbs.
412

ALL DIMN: Inches

BACK TO TOP

1 Stage Pump

P: 847.640.7867 F: 847.640.7855

2525 Clearbrook Drive Arlington Heights, IL 60005

www.libertyprocess.com

LIBERTY SERIES - 2LL10

Progressive Cavity Pump

Dimensional Drawings

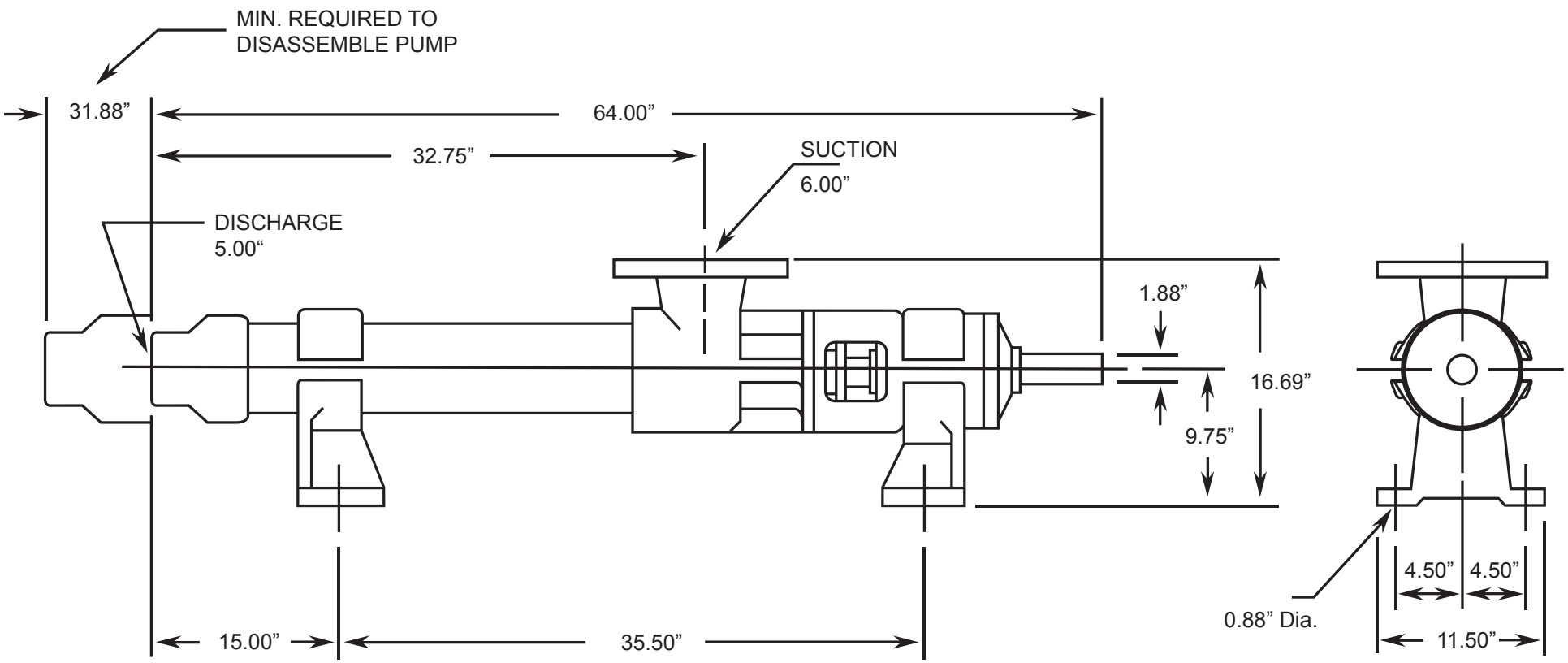

	Net weight
	≈ lbs.
ALL DIMN: Inches	**460**

BACK TO TOP

2 Stage Pump

P: 847.640.7867 F: 847.640.7855

2525 Clearbrook Drive Arlington Heights, IL 60005

www.libertyprocess.com

LIBERTY SERIES - 3LL10

Progressive Cavity Pump

Dimensional Drawings

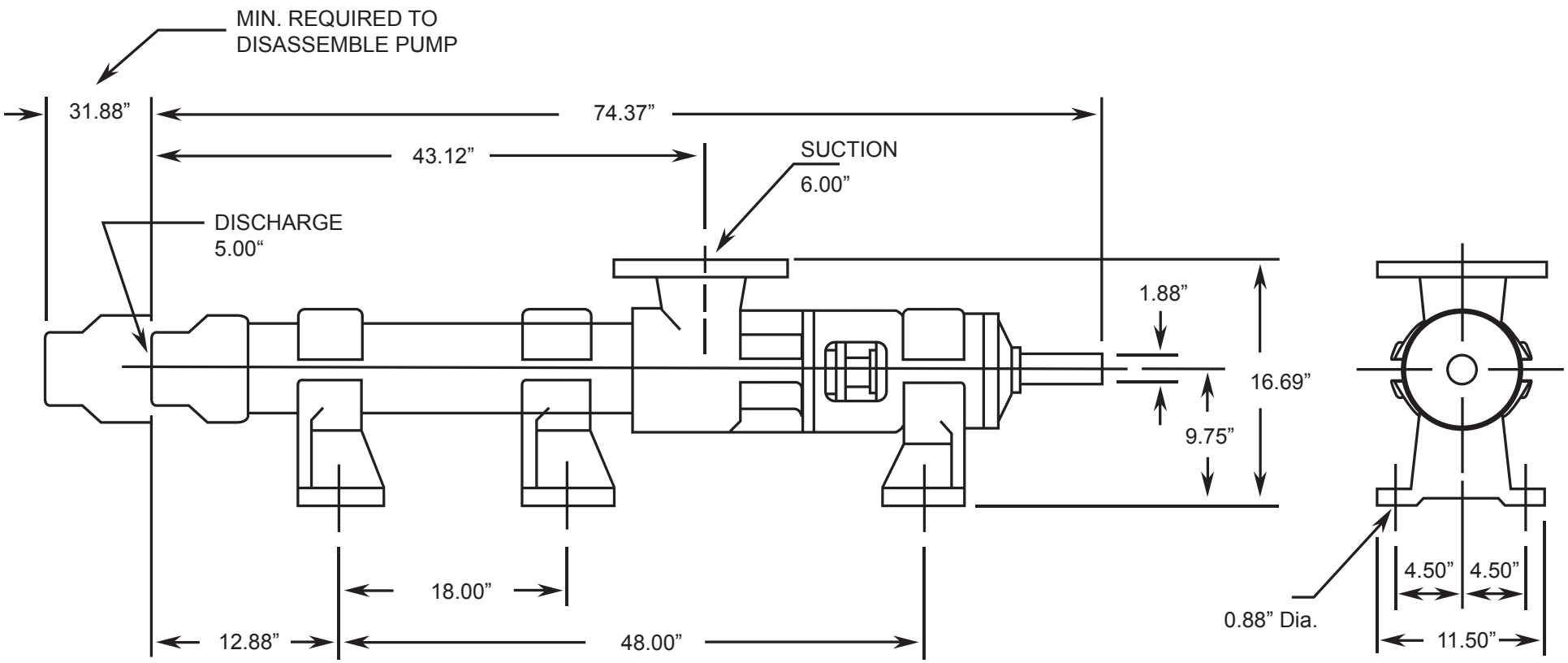

	Net weight
	≈ lbs.
ALL DIMN: Inches	**545**

BACK TO TOP

3 Stage Pump

P: 847.640.7867 F: 847.640.7855
2525 Clearbrook Drive Arlington Heights, IL 60005
www.libertyprocess.com